RACK MOUNT SALES
CRYSTAL IMAGE TECHNOLOGIES

User Manual 21.5” 4K 3840 x 2160@60Hz LED-backlit LCD

RMP-161-21K

8U Rackmount Display Panel

Options :

- **SDI / MCS**
- **Touchscreen / DC power**
- **MIL-type or lockable connector**

751

Intentionally
Left
Blank

Legal Information

First English printing, May 2026

Information in this document has been carefully checked for accuracy; however, no guarantee is given to the correctness of the contents. The information in this document is subject to change without notice. We are not liable for any injury or loss that results from the use of this equipment.

Safety Instructions

Please read all of these instructions carefully before you use the device. Save this manual for future reference.

- Unplug equipment before cleaning. Don't use liquid or spray detergent; use a moist cloth.
- Keep equipment away from excessive humidity and heat. Preferably, keep it in an air-conditioned environment with temperatures not exceeding 40º Celsius (104º Fahrenheit).
- When installing, place the equipment on a sturdy, level surface to prevent it from accidentally falling and causing damage to other equipment or injury to persons nearby.
- When the equipment is in an open position, do not cover, block or in any way obstruct the gap between it and the power supply. Proper air convection is necessary to keep it from overheating.
- Arrange the equipment's power cord in such a way that others won't trip or fall over it.
- If you are using a power cord that didn't ship with the equipment, ensure that it is rated for the voltage and current labelled on the equipment's electrical ratings label. The voltage rating on the cord should be higher than the one listed on the equipment's ratings label.
- Observe all precautions and warnings attached to the equipment.
- If you don't intend on using the equipment for a long time, disconnect it from the power outlet to prevent being damaged by transient over-voltage.
- Keep all liquids away from the equipment to minimize the risk of accidental spillage. Liquid spilled on to the power supply or on other hardware may cause damage, fire or electrical shock.
- Only qualified service personnel should open the chassis. Opening it yourself could damage the equipment and invalidate its warranty.
- If any part of the equipment becomes damaged or stops functioning, have it checked by qualified service personnel.

What the warranty does not cover

- Any product, on which the serial number has been defaced, modified or removed.
- Damage, deterioration or malfunction resulting from:
  - ☐ Accident, misuse, neglect, fire, water, lightning, or other acts of nature, unauthorized product modification, or failure to follow instructions supplied with the product.
  - ☐ Repair or attempted repair by anyone not authorized by us.
  - ☐ Any damage of the product due to shipment.
  - ☐ Removal or installation of the product.
  - ☐ Causes external to the product, such as electric power fluctuation or failure.
  - ☐ Use of supplies or parts not meeting our specifications.
  - ☐ Normal wear and tear.
  - ☐ Any other causes which does not relate to a product defect.
- Removal, installation, and set-up service charges.

Regulatory Notices Federal Communications Commission (FCC)

This equipment has been tested and found to comply with the limits for a Class A digital device, pursuant to Part 15 of the FCC rules. These limits are designed to provide reasonable protection against harmful interference in business, industrial and commercial environments.

Any changes or modifications made to this equipment may void the user's authority to operate this equipment. This equipment generates, uses, and can radiate radio frequency energy and, if not installed and used in accordance with the instructions, may cause harmful interference to radio communications.

However, there is no guarantee that interference will not occur in a particular installation. If this equipment does cause harmful interference to radio or television reception, which can be determined by turning the equipment off and on, the user is encouraged to try to correct the interference by one or more of the following measures:

- Re-position or relocate the receiving antenna.
- Increase the separation between the equipment and receiver.
- Connect the equipment into an outlet on a circuit different from that to which the receiver is connected.

Contents

< Part. 1 > RMP--161-21K

1.1	Package Content	P.1
1.2	Structure Diagram & Dimension	P.1
1.3	Installation	P.3

< Part. 2 > Specifications / OSD

2.1	Product Specifications	P.5
2.2	OSD	P.8
2.3	Picture In Picture (PIP) / Picture By Picture (PBP)	P.11

< Part. 3 > Option

3.1	12G / 4K60 / SD-SDI Broadcast-grade input	P.13
3.2	3G / HD / SD-SDI Broadcast-grade input	P.14
3.3	**MCS** Multi-display control solution	P.15
3.4	Touchscreen	P.16
3.5	DC Power	P.18
3.6	MIL-type or Lockable Connector	P.19

Before Installation

- It is very important to mount the equipment in a suitable cabinet or on a stable surface.
- Make sure the place has a good ventilation, is out of direct sunlight, away from sources of excessive dust, dirt, heat, water, moisture and vibration.

Unpacking

The equipment comes with the standard parts shown in package content. Check and make sure they are included and in good condition. If anything is missing, or damaged, contact the supplier immediately.

How To Clean Your LCD Monitor

Caution :

- To avoid the risk of electric shock, make sure your hands are dry before unplugging your monitor from or plugging your monitor into an electrical outlet.
- When you clean your monitor, do not press down on the LCD screen. Pressing down on the screen can scratch or damage your display. Pressure damage is not covered under warranty.
- Use only cleansers made specifically for cleaning monitors and monitor screens. Cleansers not made to clean monitors and monitor screens can scratch the LCD display or strip off the finish.
- Do not spray any kind of liquid directly onto the screen or case of your monitor. Spraying liquids directly onto the screen or case can cause damage which is not covered under warranty.
- Do not use paper towels or abrasive pads to clean your monitor. Using an abrasive pad or any wood based paper product such as paper towels can scratch your LCD screen.

Cleaning Your Monitor

To clean your LCD safely, please follow these steps :

① Disconnect the power cord.

② Gently wipe the surface using a clean, dry microfiber cloth. Use as little pressure as possible.

Cleaning Tough Marks and Smudges

To remove tough marks and smudges, please follow these steps :

① Disconnect the power cord.

② Spray a small amount of non-abrasive cleanser on a microfiber cloth.

Caution : Do not spray or apply any liquids directly onto the monitor. Always apply the solution to your microfiber cloth first, not directly on the parts you are cleaning.

③ Gently wipe the surface. Use as little pressure as possible.

④ Wait until your monitor is completely dry before plugging it in and powering it up.

< Part 1 >

< 1.1 > Package Content

RMP-161-21K unit X 1

- 6ft DP cable X 1
- Power adapter X 1
- Power cord X 1
- Fastener screw for rear bracket x 2

< 1.2 > Structure Diagram

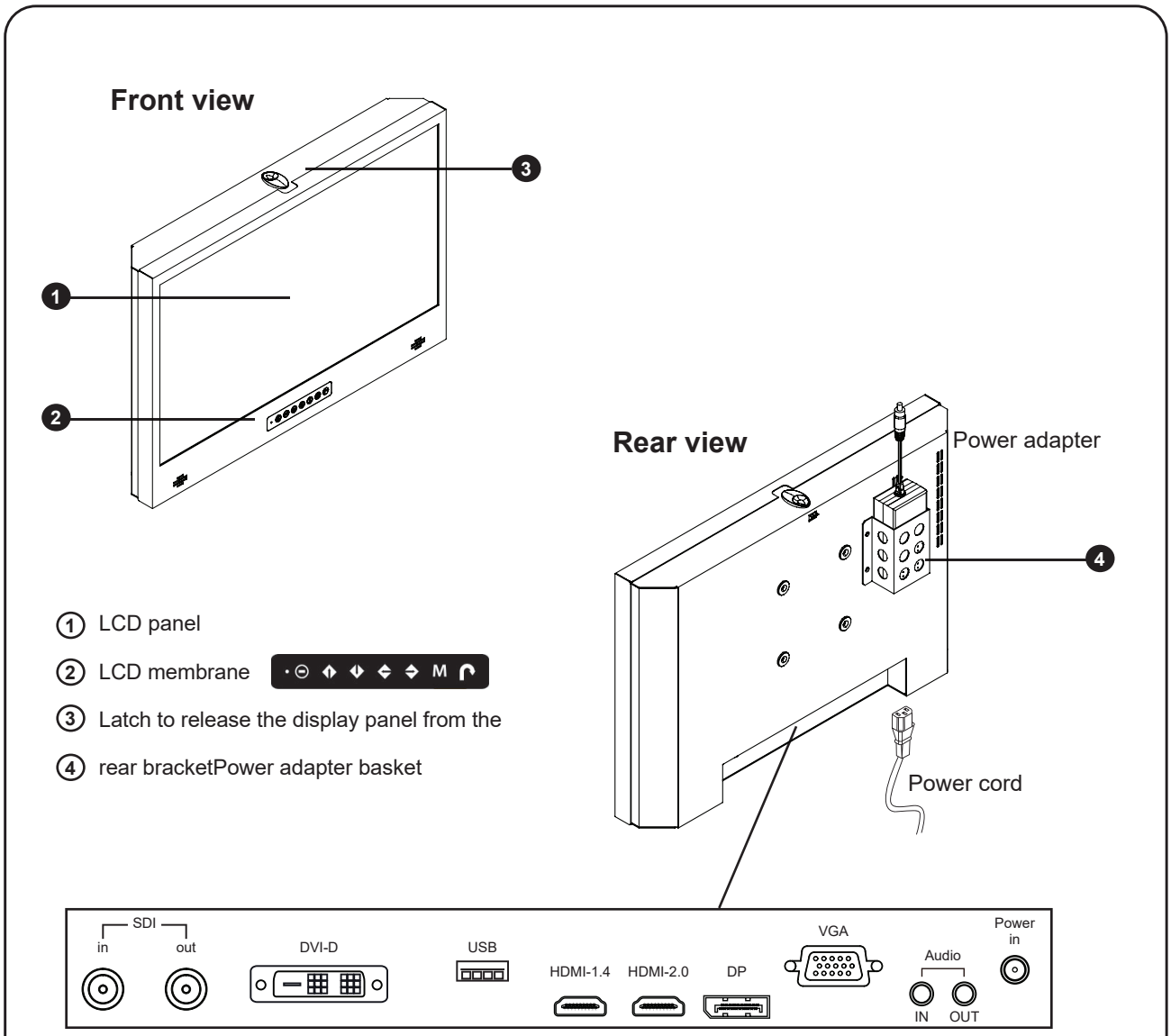

Basic I/O : **Display port 1.2 + HDMI 1.4 + HDMI 2.0**

Options : **SDI, USB for touchscreen & DC power**

< 1.2 > Dimension

Front View

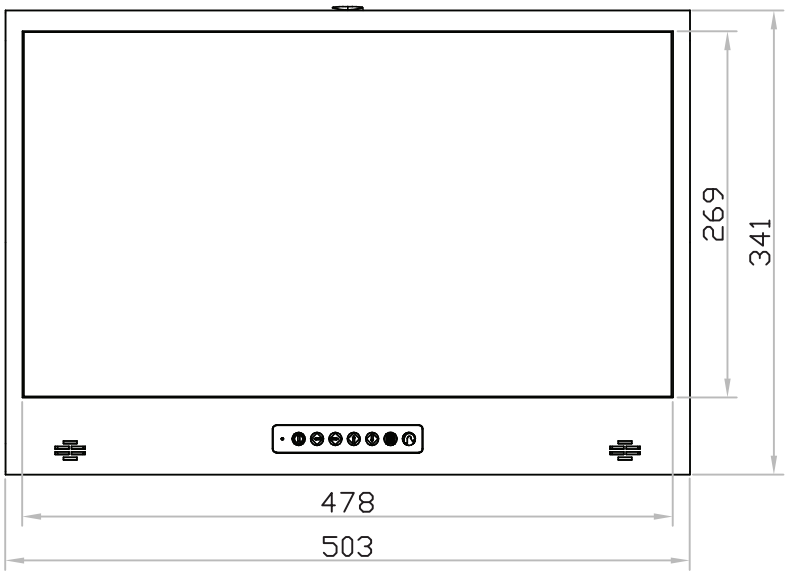

Side View

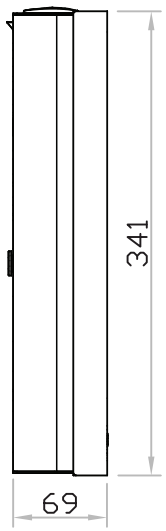

UNIT : mm
1mm = 0.03937 inch

Bottom View

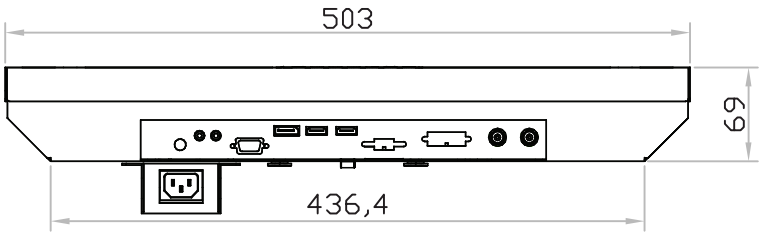

Model	Product Dimension (W x D x H)	Packing Dimension (W x D x H)	Net Weight	Gross Weight
RMP-161-21K	503 x 69 x 341 mm 19.8 x 2.7 x 13.4 inch	585 x 136 x 557 mm 23.0 x 5.4 x 21.9 inch	8.8 kg 19.4 lb	11.2 kg 24.6 lb

< 1.3 > VESA mount Installation

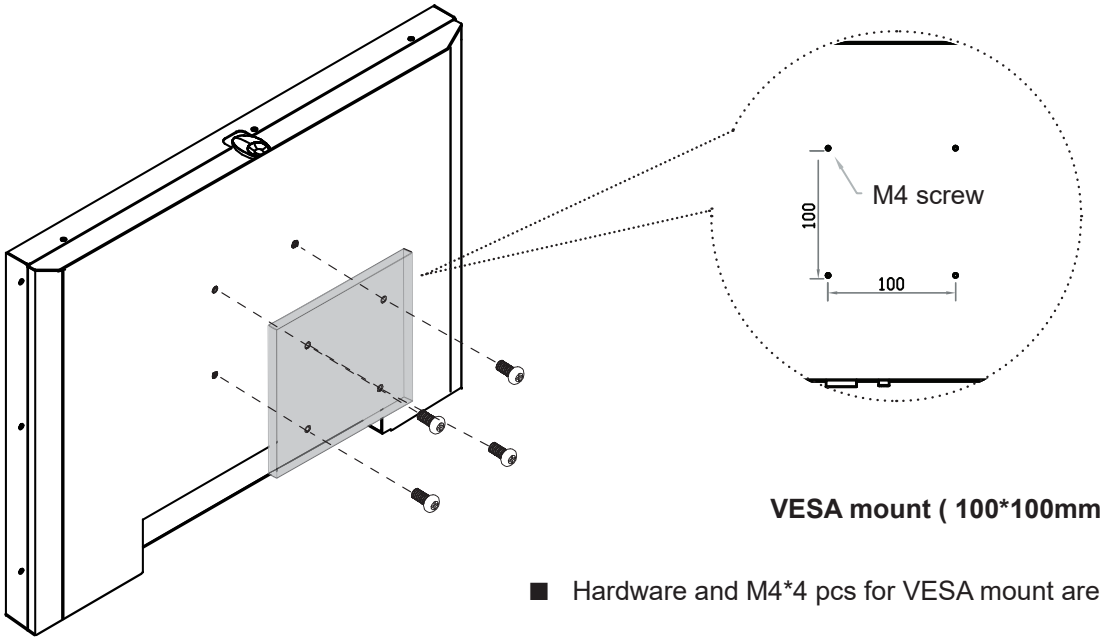

VESA mount (100*100mm)

■ Hardware and M4*4 pcs for VESA mount are not provided

< 1.3 > Rear Mounting Bracket Installation

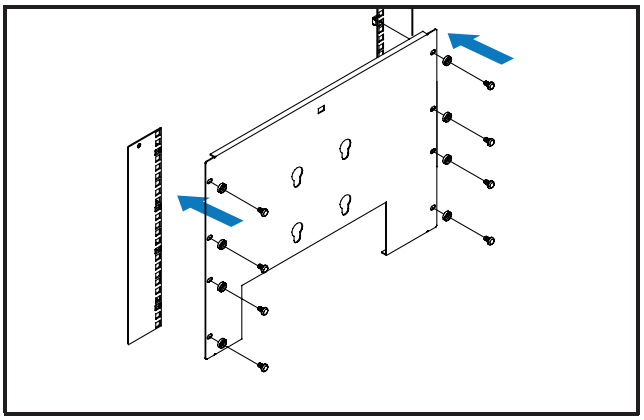

Step 1

- Mount the rear bracket with M6 screw set.
- 8 x M6 screw set are required.

M6 screw sets are not provided.

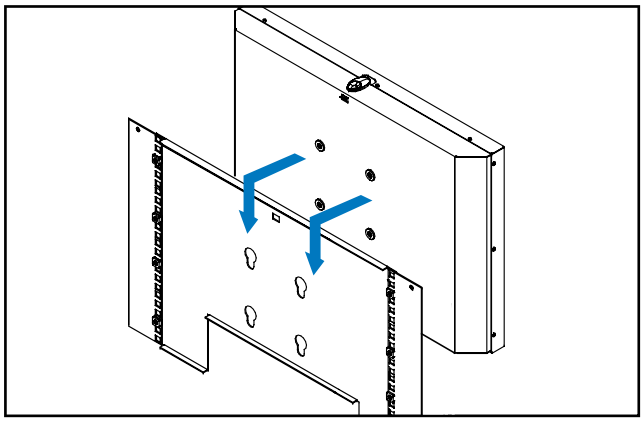

Step 2

- Insert the RP-K821 display panel into the rear bracket.

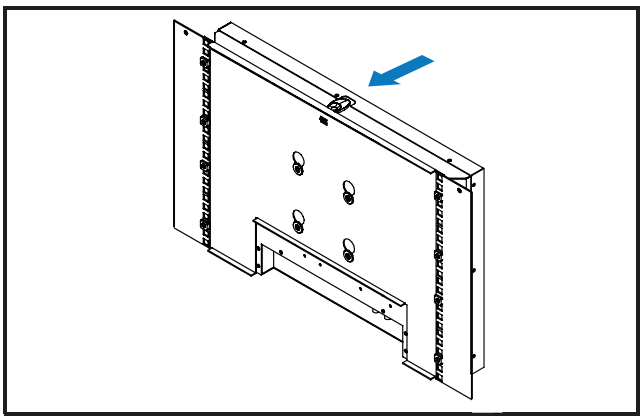

Step 3

- Fix the unit to the bracket with the top latch.

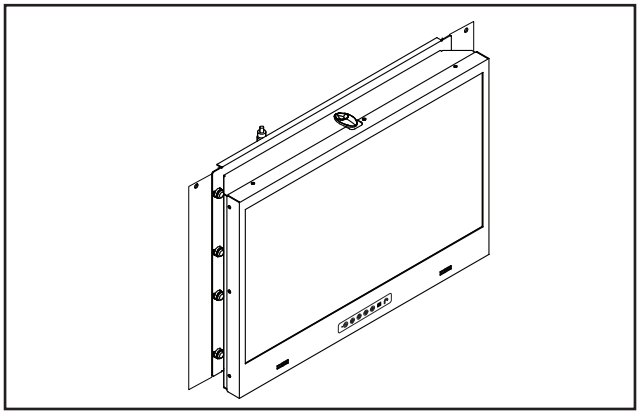

Step 4

Complete the installation

< Part 2 >

< 2.1 > Product Specifications

LED-backlit LCD Panel	Native Resolution	3840 x 2160@60Hz
	Panel Size (diagonal)	21.5”
	Brightness (cd/m²)	600
	Contrast Ratio (typ.)	1000:1
	Colors	16.7M
	Viewing Angle (L/R/U/D)	89/89/89/89
	Response Time (ms)	12
	Dot pitch (mm)	0.124
	Display Area (mm)	476.06H x 267.79V
	Surface treatment	Anti-glare
	Surface hardness	3H
	Backlight Type	LED
	MTBF (hrs)	50,000

Video	Digital	Display port	DP 1.2 / HDCP 1.3
		HDMI	HDMI 1.4 / HDCP 1.4
			HDMI 2.0 / HDCP 2.2

Audio	Audio Output	Connector	3.5mm stereo jack
		Resistance / Power level	30kΩ / 2.8V
	Speaker	Dual Stereo Speaker	2W x 2

*** When the audio output is connected, speaker output is OFF**

Power	Power Supply	Range	Auto-sensing 100 to 240VAC, 50 / 60Hz
	Power Consumption	Screen ON	Max. 132W
		Power saving mode	Max. 2W
		Power button OFF	Max. 1W

Compliance	EMC	FCC & CE
	Safety	CE / LVD & UKCA
	Environmental	RoHS3 & REACH / WEEE

Environmental Conditions	Operating	Temperature	0 to 55°C degree
		Humidity	10~90%, non-condensing
		Altitude	16,000 ft
	Storage / Non-operating	Temperature	-20 to 60°C degree
		Humidity	5~90%, non-condensing
		Altitude	40,000 ft
		Shock	10G acceleration (11ms duration)
		Vibration	10~300Hz 0.5G RMS random

Physical Specification	Product (W x D x H)	503 x 69 x 341 mm 19.8 x 2.7 x 13.4 inch
	Packing (W x D x H)	585 x 136 x 557 mm 23.0 x 5.4 x 21.9 inch
	Net Weight	8.8 kg / 19.4 lb
	Gross Weight	11.2 kg / 24.6 lb

*** All dimensions stated are subject to change if options are selected / integrated to base model part codes**

Applicable Format	Display Port Input	PC Signal	3840 x 2160 x 60Hz
			2560 x 1440 x 60Hz
			1920 x 1080 x 60Hz
			1600 x 1200 x 60Hz
			1360 x 768 x 60Hz
			1280 x 1024 x 60 / 75Hz
			1280 x 768 x 60Hz
			1024 x 768 x 60 / 70 / 75Hz
			800 x 600 x 60 / 72 / 75Hz
			720 x 400 x 70Hz
			640 x 480 x 60 / 72 / 75Hz
		Audio Signal	2ch Linear PCM
	HDMI Input	HDMI 2.0	3840 x 2160 x 60Hz
		HDMI 2.0 / 1.4	3840 x 2160 x 30Hz
			2560 x 1440 x 60Hz
			1920 x 1080 x 50 / 60Hz (1080p)
			1920 x 1080 x 25 / 30Hz (1080i)
			1280 x 720 x 50 / 60Hz (720p)
			720 x 480 x 50 / 60Hz (576p / 480p)
		Audio Signal	2ch Linear PCM

Intentionally
Left
Blank

< 2.2 > On-screen Display Operation (OSD)

- Power light
- Green = On
- Orange = Power saving

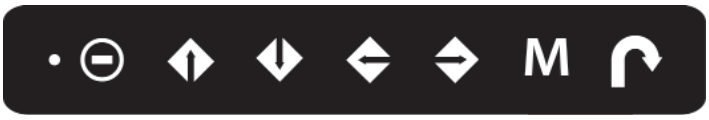

Membrane Switch	Function
	Power on / off LCD
M	Display the OSD menu
	Scrolls through menu options and adjusts the displayed control (To auto adjustment by pressing the button for 5 seconds)
	Exit the OSD screen Toggle analog, digital & video connection (DVI-D and video options only)

Select another video input (only available for models with multiple video input) :

(a) Press the button to call up the on-screen video mode on top right corner.

(b) Use up/down arrow to the select the video input

(c) Press the button M to confirm the selection

< 2.2 > On-screen Display Operation (OSD)

① Picture

Brightness : Adjust the screen brightness

Contrast : Adjust the difference between the image background (black level) and the foreground (white level)

Black level : Adjust background black level of the screen

Eco : Screen in power saving mode

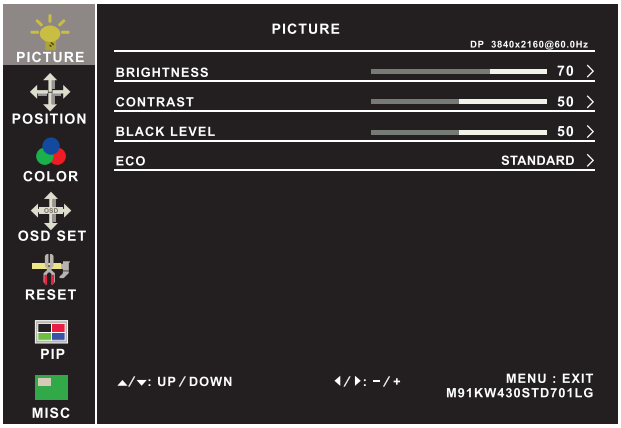

② Position

Picture size : Adjust the image size
- Full Screen / 4:3 / 5:4 / Pixel to Pixel

DP version : Select the DP version

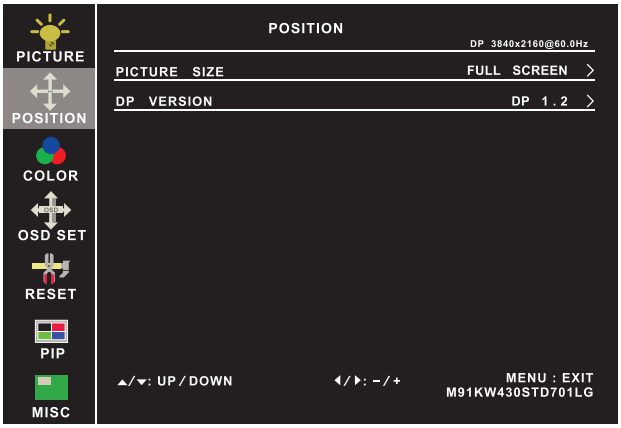

③ Color

Color temperature : User / Warm / Cool / 5400k mode and Red / Green / Blue color balance

Sharpness : Adjust the image from weak to sharp

Hue : Adjust the screen hue value

Saturation : Adjust the saturation of the image color

Dynamic luminous control : Control the dynamic brightness

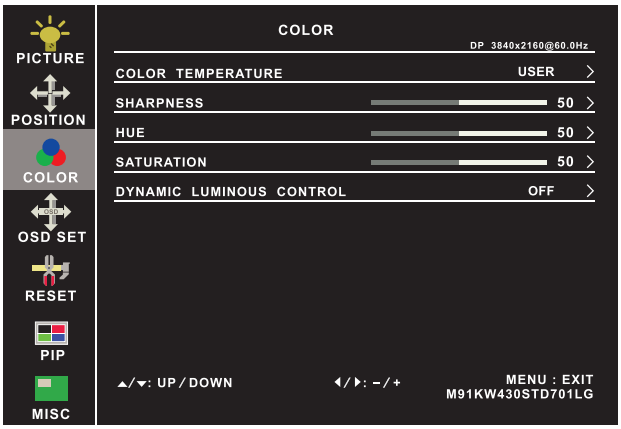

④ OSD Set

Language : Select the language in which the OSD menu is displayed - English

OSD H-Position : Align the screen image left or right

OSD V-Position : Align the screen image up or down

OSD time out : Adjust the screen timeout

OSD transparency : Adjust the screen transparency

OSD size : Adjust the screen size - Normal / Small

OSD rotation : Rotate the screen - 90° / 180° / 270°

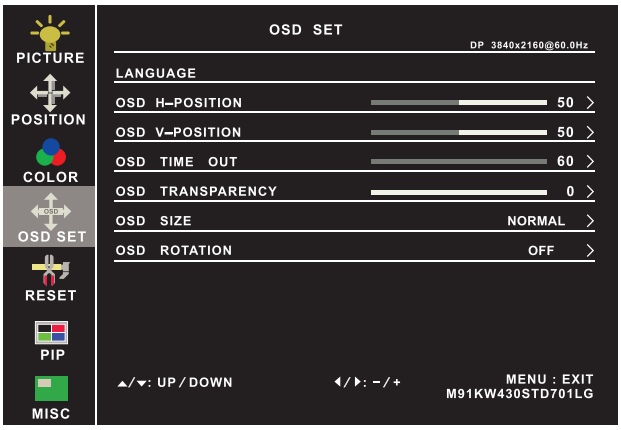

⑤ Reset

Reset : Return the adjustment back to factory setting

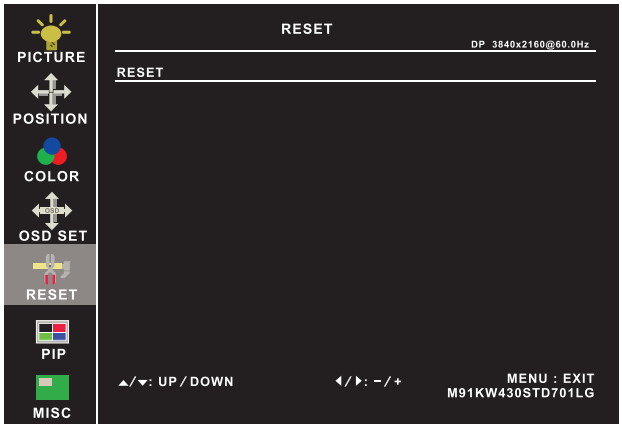

⑥ PIP

PIP mode : Enter into PIP / PBP setting - PIP MODE /
PBP 2WIN (Main screen + 1 sub screen) /
PBP 3WIN (Main screen + 2 sub screen) /
PBP 4WIN (Main screen + 3 sub screen)
Select the signal input of each sub screen

PIP size : Adjust the size of the Sub screen
- Small / Medium / Large / Huge

PIP position : Adjust the position of the Sub screen
- Top Left / Top Right / Bottom Left / Bottom Right

Swap : Swap the input signal of PIP / PBP sub screen

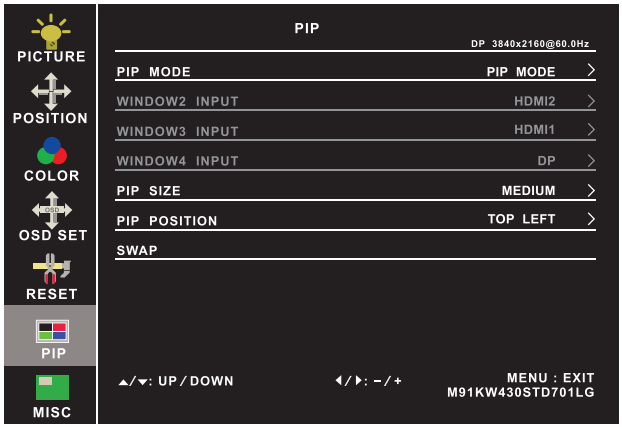

⑦ MISC

Signal source : Select the signal source - DP / HDMI1 / HDMI2

Mute : Turn off the surrounding sound

Audio in : Auto / Line in / DP

Volume : Adjust the volume of sound

Sleep mode : Set the off time - 10 min / 20 min / 30 min /
50 min / 60 min / 120 min / 240 min

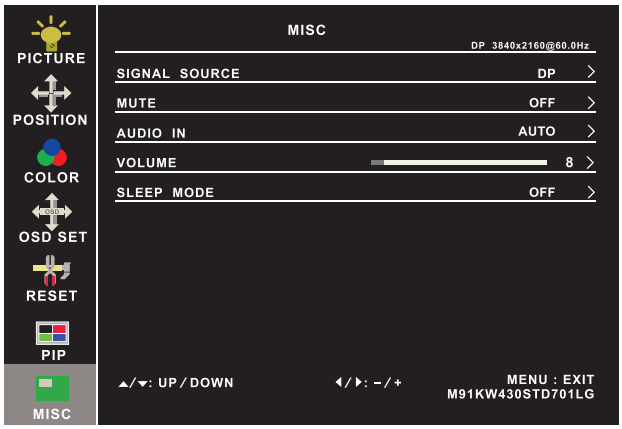

Options on Reset page

Rotation : Rotate the image in Full screen or 1:1
- 90° / 180° / 270°

Picture size : Adjust the image size in Full screen or 1:1

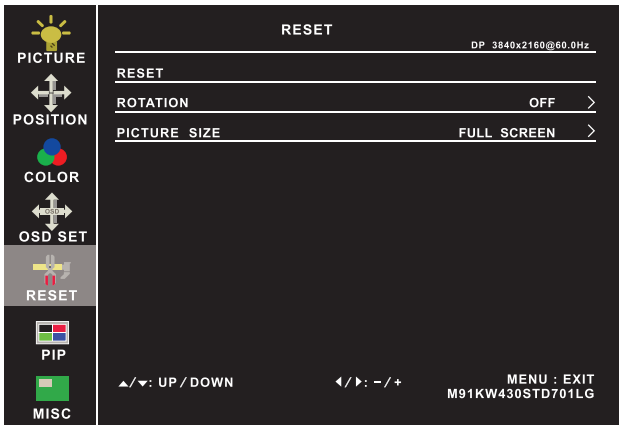

< 2.3 > How to Use Picture In Picture (PIP) / Picture By Picture (PBP)

< 2.3.1 > Picture in Picture (PIP)

Mode

Display the Sub screen in the Main screen.

OSD Menu → MISC → PIP Mode → Large / Small / OFF

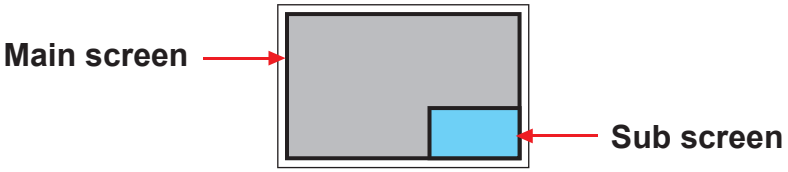

Position

Adjust the position of the Sub screen (top left, bottom left, top right, bottom right)

OSD Menu → MISC → PIP Position → top left / top right / bottom left / bottom right

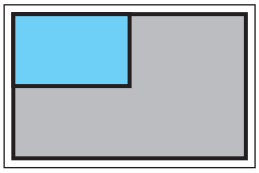

top left

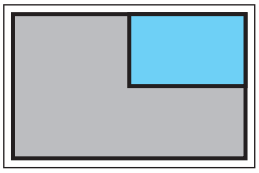

top right

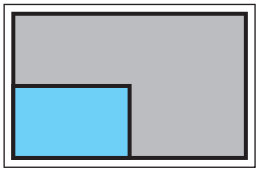

bottom left

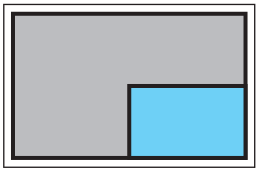

bottom right

Size

Adjust the size of the Sub screen (Large / Small)

OSD Menu → MISC → PIP Mode → Large / Small

Size of Sub screen

LCD Monitor	Large Sub screen	Small Sub screen
1920 x 1200	552 x 414	480 x 360
1920 x 1080	552 x 414	480 x 360
1440 x 900	414 x 310	360 x 270
1366 x 768	392 x 294	340 x 254
1280 x 1024	368 x 276	320 x 240

< 2.3.2 > Picture By Picture (PBP)

Mode

Display the Sub screen next to the Main screen.

OSD Menu → MISC → PIP Mode → PBP

Size

LCD Monitor	Main / Sub screen
1920 x 1200	955 x 716
1920 x 1080	955 x 716
1440 x 900	715 x 536
1366 x 768	678 x 508
1280 x 1024	635 x 476

< 2.3.3 > PIP / PBP Source

To select an input signal for PIP / PBP Sub screen.

OSD Menu → MISC → PIP Source → HDMI / SDI

The PIP / PBP is operable in the following table :

Main \ Sub	HDMI	SDI
HDMI	X	O
SDI	O	X

< Part 3 >

< 3.1 > Options : 12G / 4K60 / SD-SDI input

Crystal Image SDI input is an ideal solution for the broadcast-grade video and high resolution CCTV market.

Designed for use with displays, a SDI input module can support up to 3840 x 2160p @60Hz resolution without using additional space or power and it comes standard with a 2-year warranty.

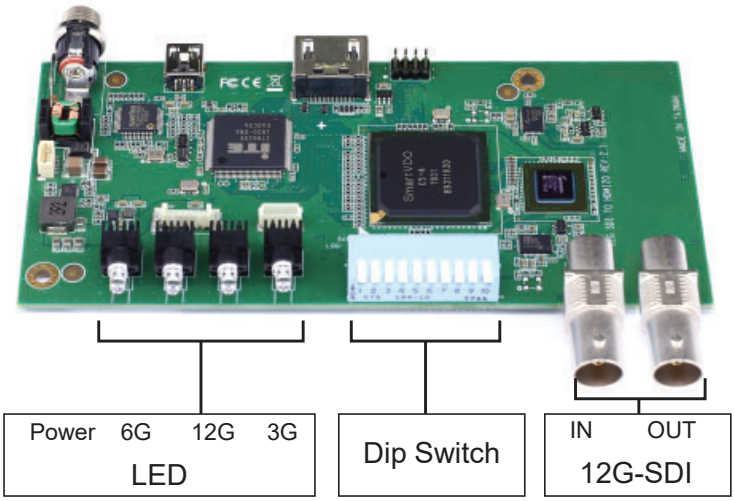

Product Specifications

INPUT	
12G-SDI IN	BNC RG6 / RG59 (75Ω)

OUTPUT	
12G-SDI OUT	BNC RG6 / RG59 (75Ω)

Compatible Video Format		
12G-SDI IN	3840 x 2160p	@60 / 50fps
6G-SDI IN	3840 x 2160p	@30 / 25 / 24fps
3G-SDI IN	1920 x 1080p	@60 / 50fps
HD-SDI IN	1920 x 1080p 1920 x 1080i 1280 x 720p	@30 / 25 / 24fps @60 / 50fps @60 / 50fps

Dip Switch Mode

Output Color	4	5
YUV444	OFF	OFF
YUV422	OFF	**ON**
RGB444	**ON**	OFF
YUV420	**ON**	**ON**

EQ	6	7
Auto	OFF	OFF
Disable	OFF	**ON**
Enable	**ON**	OFF

Out1 Cable length	8
Short	OFF
Long	**ON**

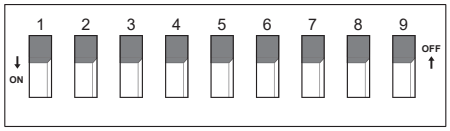

< 3.2 > Options : 3G / HD / SD-SDI input

RMP-161-21K

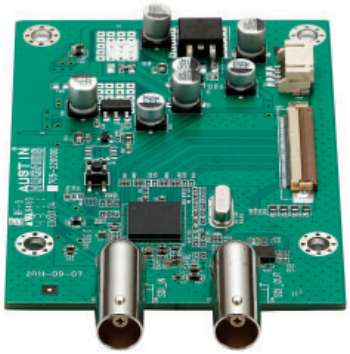

Crystal Image SDI input is an ideal solution for the broadcast-grade video and high resolution CCTV market.

Designed for use with Crystal Image displays, a SDI input module can support up to 1080p @60Hz resolution without using additional space or power and it comes standard with a 2-year warranty.

SDI

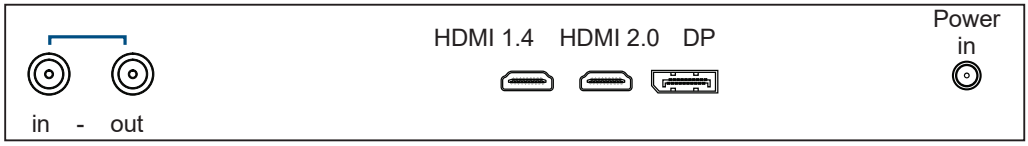

INPUT	3G-SDI IN	BNC x 1 / 0.8Vp-p (75 ohm)
	3G-SDI OUT	BNC x 1 / Active through, equalized & relocked

Standard Compliance	Video	SMPTE 425M / 274M / 296M / 125M ITU-R BT.656
	Audio	SMPTE 299M / 272M-C

Compatible Video Format	3G-SDI	1080p 1080p 1080i 720p	@60 / 50Hz, 4:2:2 @30 / 25 / 24Hz, 4:4:4 @60 / 50Hz, 4:4:4 @60 / 50Hz, 4:4:4
	HD-SDI	1080p 1080i 720p	@30 / 25 / 24Hz, 4:2:2 @60 / 50Hz, 4:2:2 @60 / 50Hz, 4:2:2
	SD-SDI	480i	@60Hz, 4:2:2
	ITU-R BT.656	576i	@50Hz, 4:2:2

Compatible Audio Format	3G-SDI	48kHz, 16 / 20 / 24 bit, 2 CH, Synchronized Video
	HD-SDI	48kHz, 16 / 20 / 24 bit, 2 CH, Synchronized Video
	SD-SDI	48kHz, 16 / 20 / 24 bit, 2 CH, Synchronized / Asynchronized Video

Max. Transmission Distance 75 ohm coaxial cable	3G-SDI	150m at 2.97Gb/s
	HD-SDI	250m at 1.485Gb/s
	SD-SDI	480m at 270Mb/s

< 3.3 > Options : MCS (Multi-display Control)

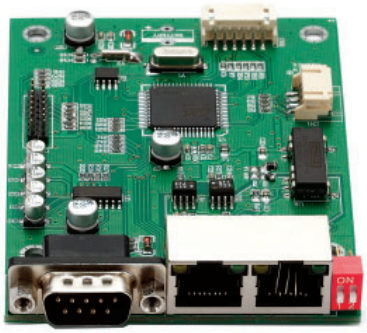

More control is always good. Especially when it is necessary and easy. Crystal Image provides MCS solution to control the **OSD** of various Crystal Image LCD display up to 64 units.

The RS-232C is used for the communication between the PC and the fi rst display via a 15 feet serial cable while the CAN bus is used for the various LCD displays cascade together via CAT 5/6 cable, and daisy chain up to 1,000 meters.

Designed for use with Crystal Imge LCD displays, CIT provides a MCS input module without using additional space or power and it comes standard with a 2-year warranty.

MCS

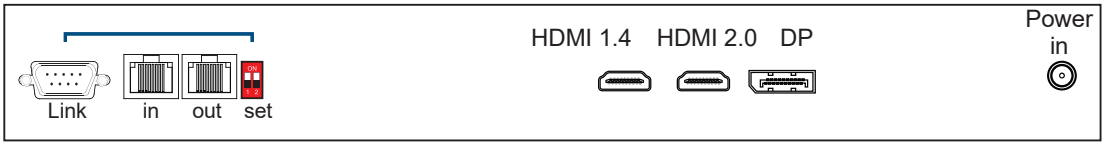

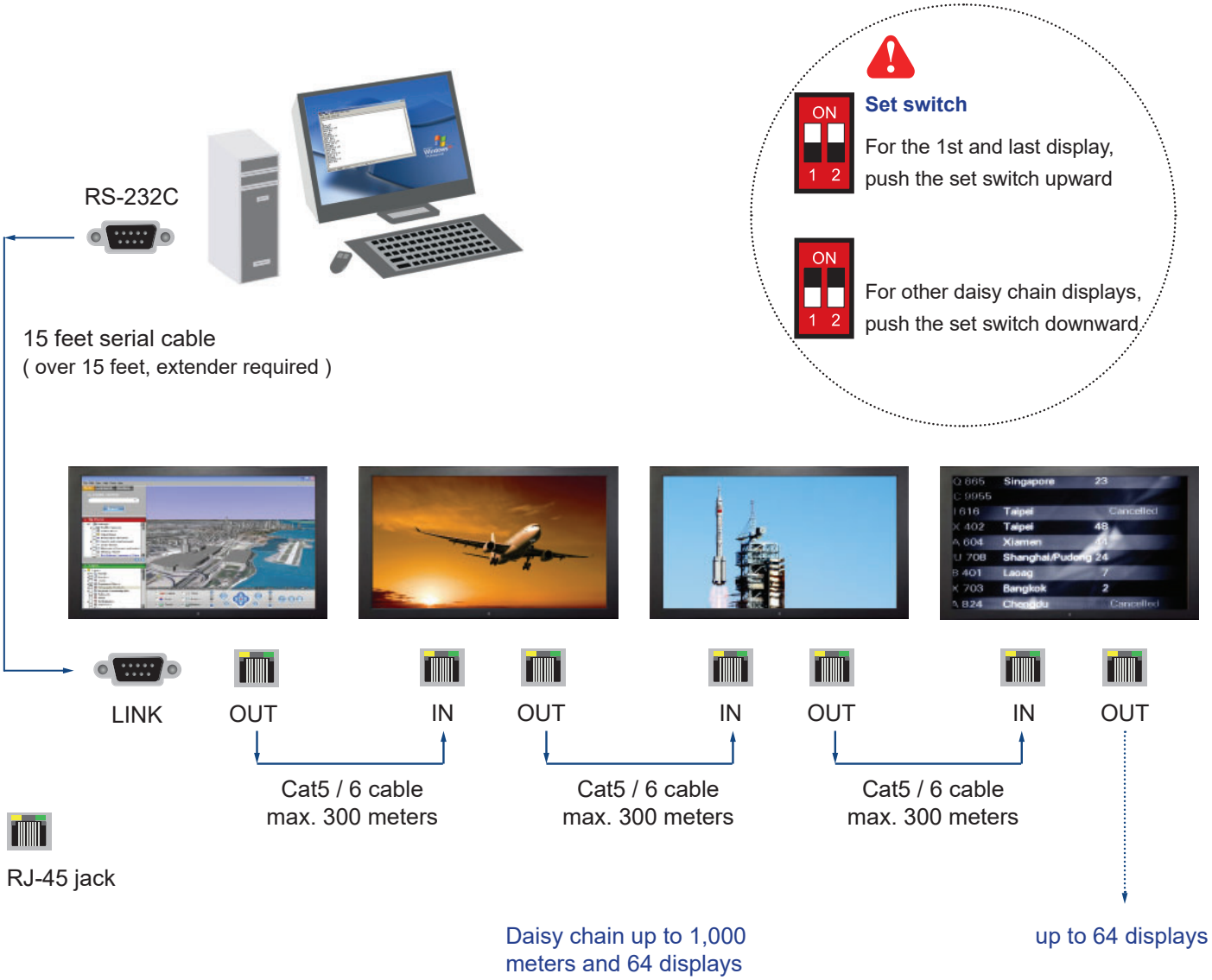

K21" USB Touchscreen Specification

Model	K21TPC-10 Multi-touch	TRB e-Resistive
Technology	Projected Capacitive	5-Wire Resistive
Touch Point	10 point touch standard (special requirement available)	Single
Input Type	Finger or Capacitive Stylus	Finger or Stylus
Resolution	4096 x 4096	2048 x 2048
Touch Point Accuracy	± 2 mm	-
Response Speed	< 5 ms	15 ms
Activation Force	< 5 g	≤ 50 g
Surface Hardness	6H	3H
Light Transmission	> 85%	80% ± 3%
Haze	3%↓	8% ± 3%
Durability	50 million touches	10 million touches
Top Layer	3 mm Glass	ITO Film
Bottom Layer	0.7 mm Sensor Glass	ITO Glass
Thickness	3.9 ± 0.1 mm	2.2 ± 0.2 mm
Connector	USB	USB Type A
Compatibility	Windows 7 / XP / Linux / Mac	Windows / Linux / Android / Mac

- Dimension will be changed if Multi-touch required
- USB touchscreen package includes 1 x 6ft USB cable, quick reference guideline and CD disc
- For detailed information, please refer to the attached CD disc
- As the touchscreen unit is not made of toughened glass, please handle it carefully

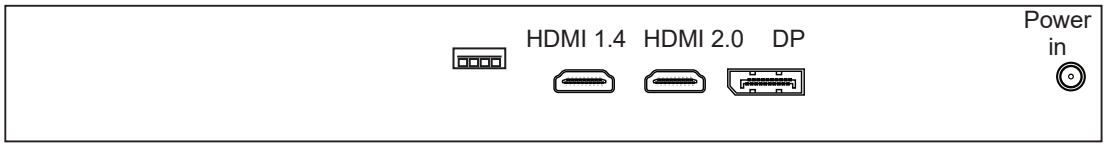

USB Touchscreen

< 3.4 > Options : Touchscreen & driver

K21TPC-10 Driver

Connect the USB cable from the USB port on the LCD to a computer. The touch screen supports easy Plug-and-Play operations. There is no need to install additional drivers on the computer.

TRB Driver

Please follow the below steps to setup the touch screen:-

Step 1. Run the bundled CD disc or download the driver from the link below :
http://www.eeti.com.tw/drivers_win.html

Step 2. Double click the Setup.exe

Step 3. Follow the installation instruction to finish the setup

Step 4. After installation, run the TouchKit program & the “4 point calibration”

Please do the initial calibration after the first setup

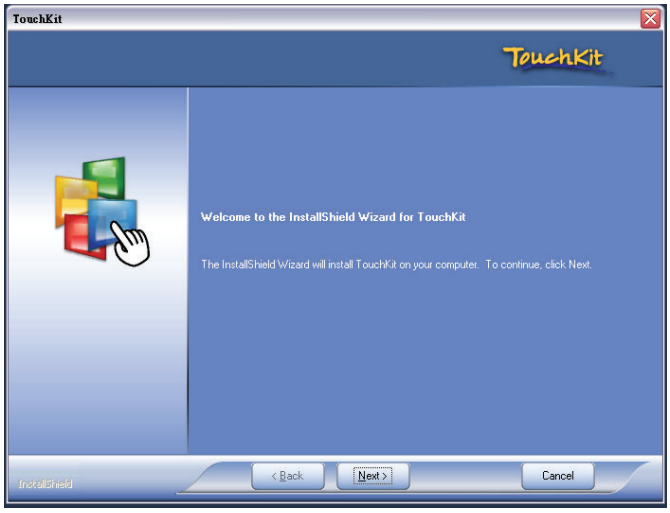

< 3.5 > Options : DC Power

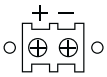

Model	12V	24V	48V	125V	250V
Input rating					
Input voltage:	12-Volt	24-Volt	48-Volt	110-Volt	300-Volt
Input range:	9 ~ 18V	18 ~ 36V	36 ~ 75V	66 ~ 160V	180 ~ 425V
Input current					
- No load	50 mA	50 mA	50 mA	35 mA	10 mA
- Full load	4950 mA	2450 mA	1220 mA	749 mA	600 mA
Output rating					
Output voltage:	12-Volt	12-Volt	12-Volt	12-Volt	12-Volt
Output current:	4.16A	4.16A	4.16A	6.25A	12.5A
Efficiency	84%	85%	85%	91%	86%

***** For DC power option :**

(1) If the unit with LCD, earthing may be required

< 3.6 > Options : MIL-type or Lockable Connector

	Input	Part no.	MIL Standard
MIL - type Connector	DC Power *** (Male)	MS3470W8-33P	MIL - DTL - 26482
	VGA *** (Male)	MS3470W14-15P	MIL - DTL - 26482

*** There are several additional MIL DC and VGA connector types with varying design characteristics to meet cost considerations and to provide users with the most design flexibility possible. For more information, please contact us.

	Input	Part no.	Standard
Lockable Connector	DC Power (Male)	YM-Ext-461CP001	D-type 3W3
	USB	LUSB - A111 - 00	-

*** MIL - type or Lockable connectors above can be integrated with our LCD displays. Sale service just for connectors not provided.

The company reserves the right to modify product specifications without prior notice and assumes no responsibility for any error which may appear in this publication.

All brand names, logo and registered trademarks are properties of their respective owners.